ENGINEERING PORTFOLIO / ACTIVE PROJECT

High-Speed Connectors

OSFP reference design and thermal studies

Ramin Mashayekhi | Progress report | Revision 01

28 September 2026

In progress - design and analysis ongoing.
The reference CAD is developed, while thermal setup, verification and performance evaluation continue.

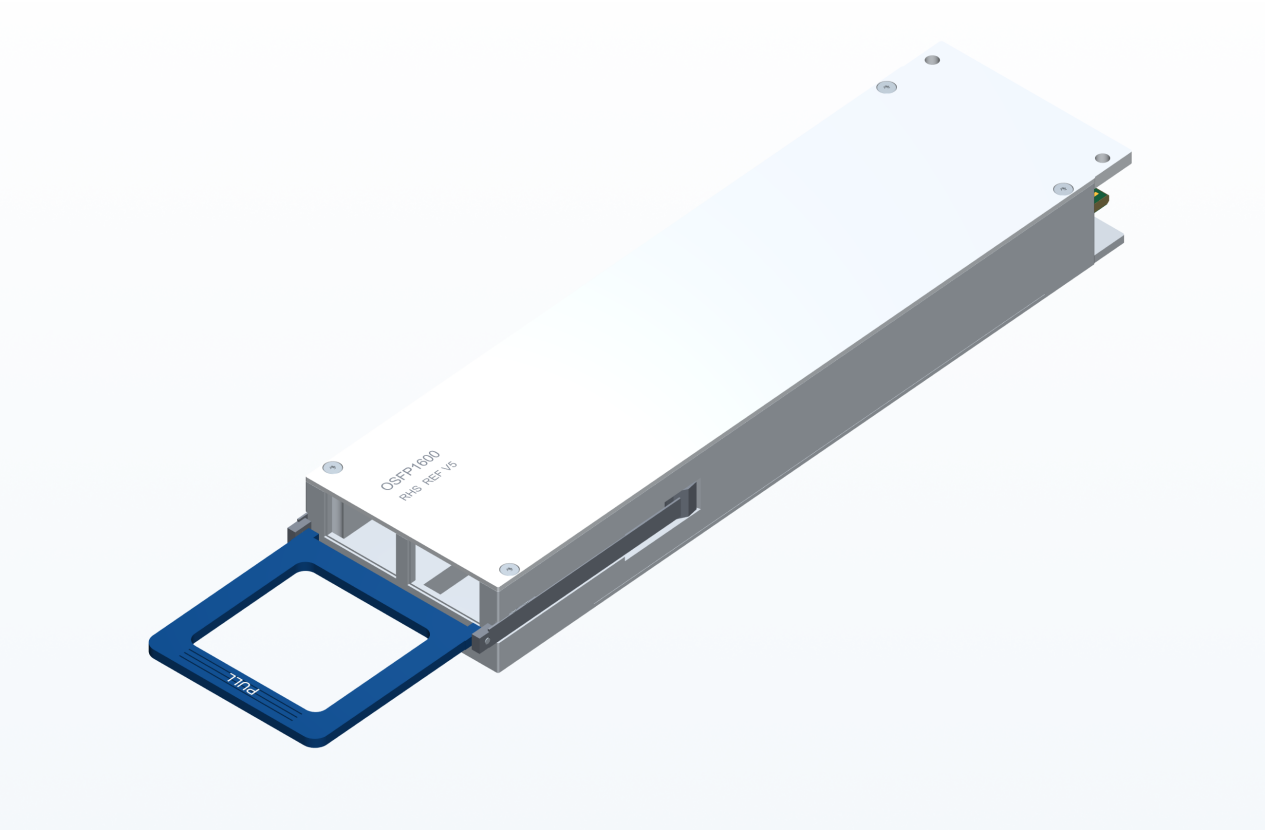

Reference CAD of the removable OSFP module. This is a saved-geometry render, not a photograph or a production release. [S1]

This progress record connects the enclosure, electronic packaging, optical connection details and thermal-model preparation. It also records the separate eight-module liquid-cooling study and the work still needed before results can be reported.

Evidence reviewed through 28 September 2026. No new simulation was run for this report.

01 / CURRENT POSITION

What the project covers

Two related scales of work are being developed. Their loads, geometry and verification status remain distinct.

Workstream	Current evidence	Status
Single OSFP module	Detailed reference CAD, KiCad project, simplified thermal CAD, prepared 20 W solid-conduction cases.	CAD developed; analysis incomplete.
Eight-module cooling assembly	Latest v11 full-stack geometry and 30-minichannel cold-plate setup: 8 x 40 W, 1 L/min.	Mesh import and setup repair pending.

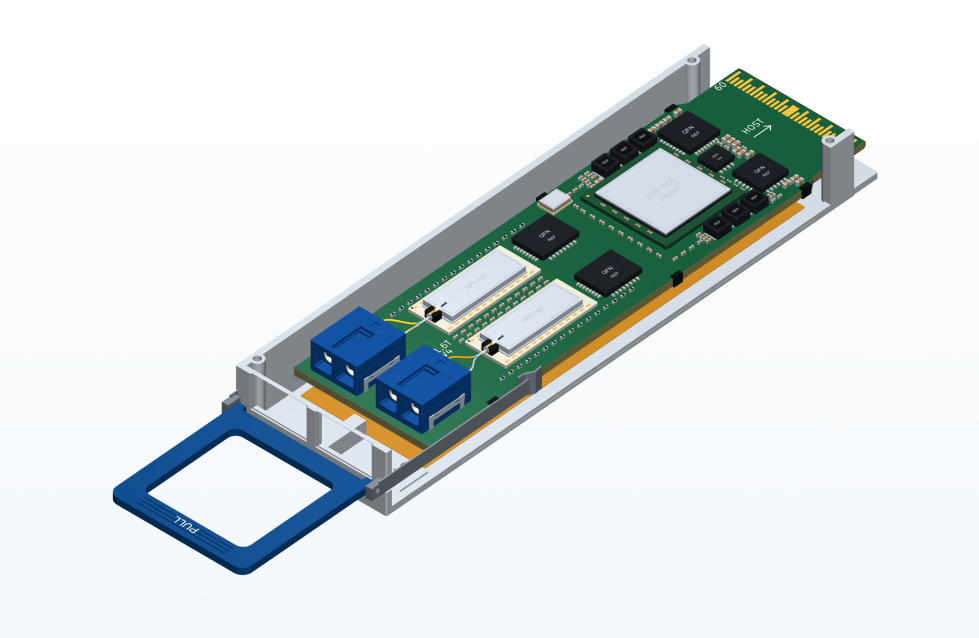

Module v5 inspection cutaway. The lid and thermal hardware are hidden and one tray side is sectioned to expose the board and optical paths. [S1]

Purpose. Build inspectable geometry, document the interfaces and prepare traceable thermal studies. The available files show engineering development; they do not yet establish a completed thermal design.

Evidence boundary
Independent public-reference reconstruction. Internal arrangement, materials and loads include assumptions. Manufacturer affiliation, proprietary CAD and product qualification are not claimed.

Sources: module and thermal records [S1-S5]; current eight-module package [S6].

02 / MECHANICAL ARCHITECTURE

Enclosure and thermal stack

Separate solids and named groups make the assembly easier to inspect and revise.

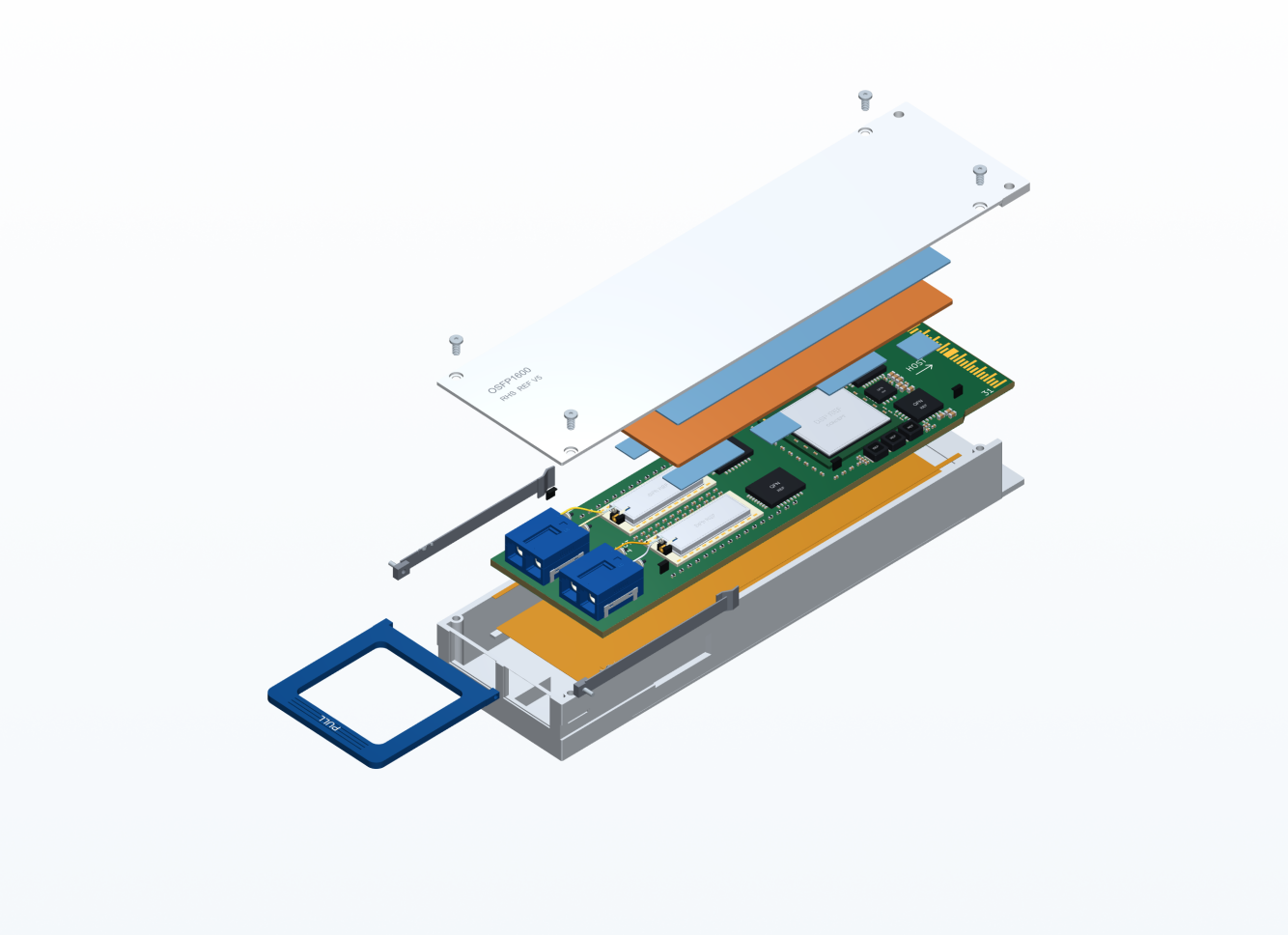

Exploded v5 CAD: lid, lid thermal pad, copper spreader, component pads, populated board, lower tray and release hardware. Colours are presentation assignments. [S1]

3,080
valid solids in detailed assembly

65
named added mechanical groups

9
physical thermal interface pads

Developed interfaces. The model includes a flat RHS lid, a stepped copper heat spreader with eight contact pedestals, board supports and insulating layers, clips, fasteners and release parts.

Still to resolve. Static geometry checks do not establish latch travel, insertion force, tolerance limits, optical plug access or assembly feasibility. Those checks remain part of the ongoing design work.

Source: saved STEP export/reimport and assembly documentation [S1]. Groups and solids are different counts.

03 / ELECTRONIC PACKAGING

PCB and package reference

The native KiCad project and local component models preserve an editable packaging reference.

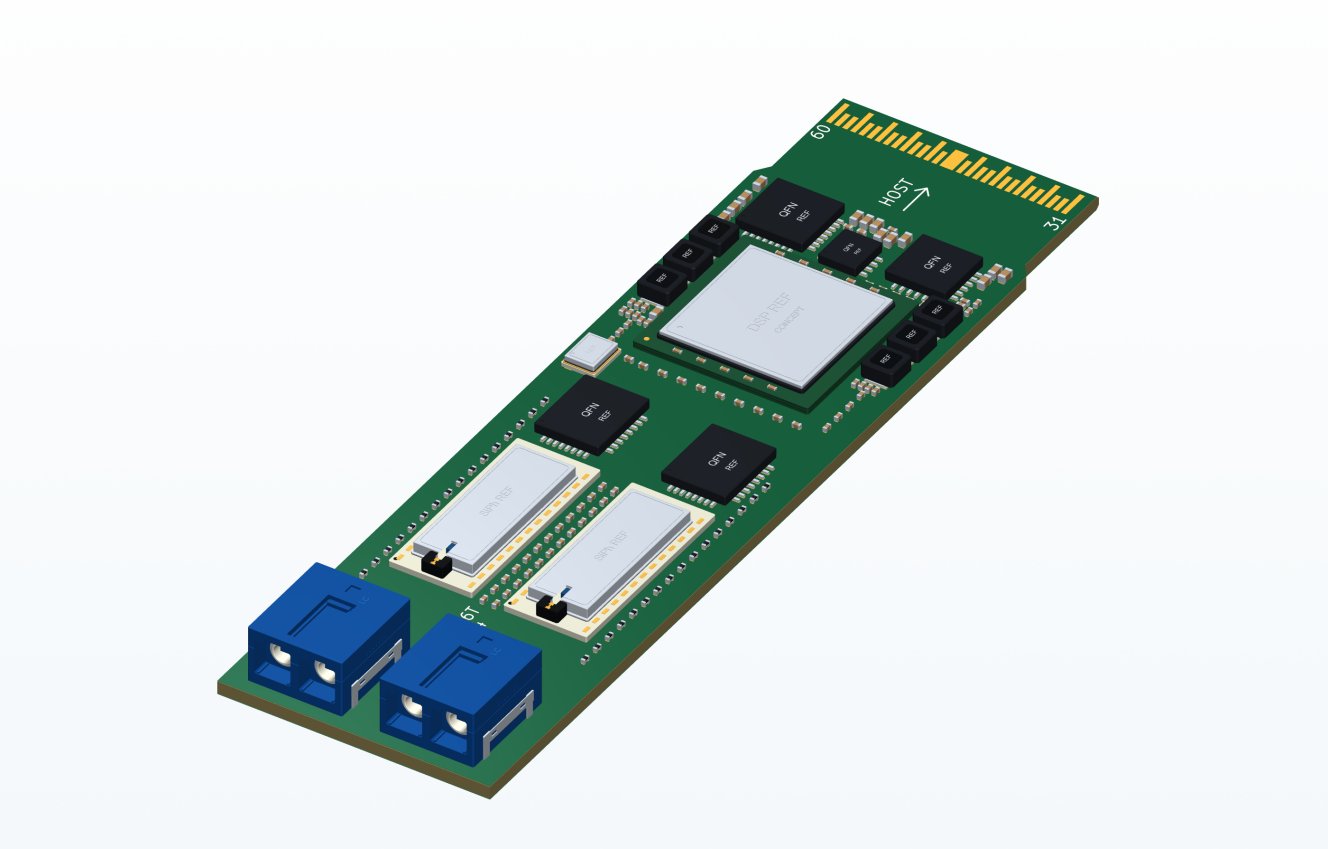

Detailed PCB v4 render, including package bodies, terminals, small components and logical card-edge contacts. [S2]

168
populated component instances

15
component model types

60
logical edge-contact positions

What exists. Both board faces are represented in the source model, with package details, copper contacts, vias, solder mask and silkscreen geometry. The detailed PCB export contains 2,984 valid solids.

How to interpret it. This is a generic component arrangement for mechanical and thermal reference. A functional schematic, verified netlist, high-speed routing, signal-integrity analysis and electrical or optical operation have not been established.

Source: PCB v4 record and existing technical audit [S2]. CAD detail does not establish electrical performance.

04 / OPTICAL CONNECTION DETAILS

Making interfaces visible

Connector inspection views expose the parts that are difficult to review inside the full module.

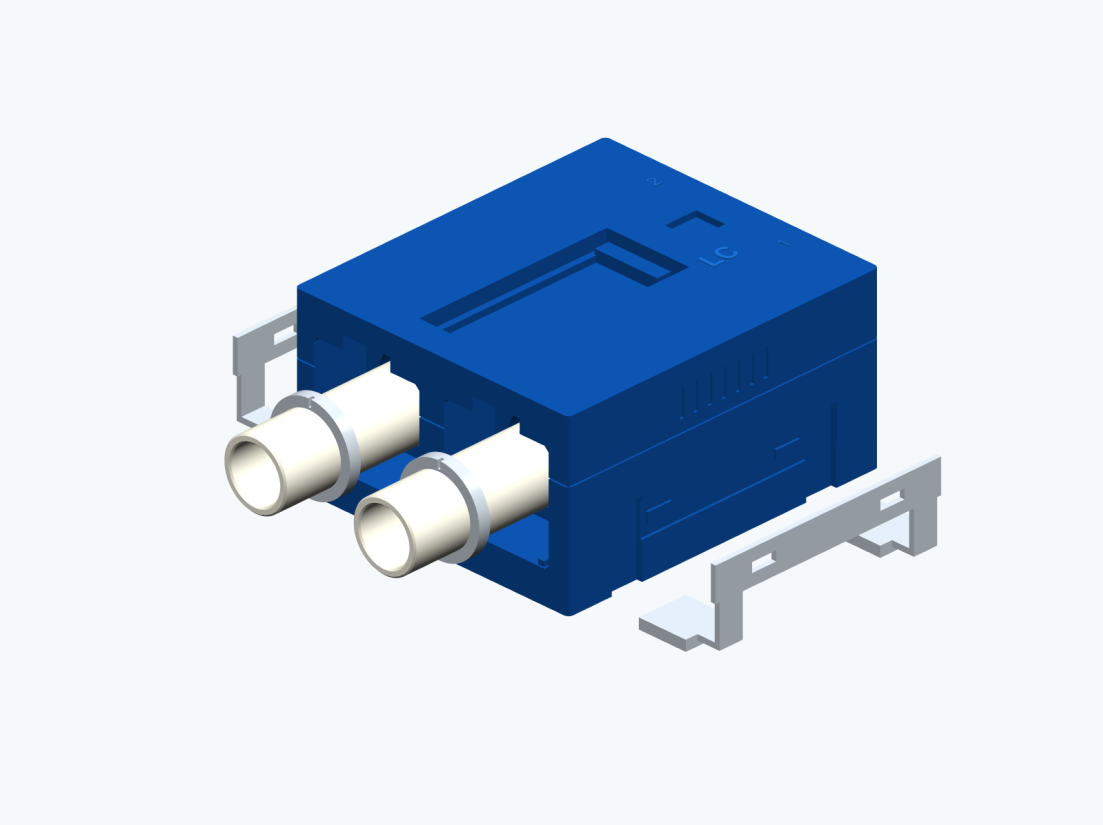

LC receptacle inspection model with housing, sleeves and retention detail separated. Generic reference construction. [S2]

Present in the reference model

Two optical connector bodies sit at the module front. The complete v5 assembly adds four internal optical pigtails, alignment features and strain-relief details.

The saved views support inspection of the physical arrangement and its relationship to the board and enclosure.

Next interface checks

Check access with a specific mating cable, verify the recessed connector position, and evaluate fiber routing and bend limits across assembly and service states.

Confirm retention, optical alignment and manufacturing tolerances before treating the reconstructed details as functional design.

Sources: optical-detail model record [S2] and complete-module interface limitations [S1].

05 / PREPARING THE THERMAL MODEL

From detailed CAD to thermal regions

Simplification retains the main heat path while removing detail that would make meshing unnecessarily expensive.

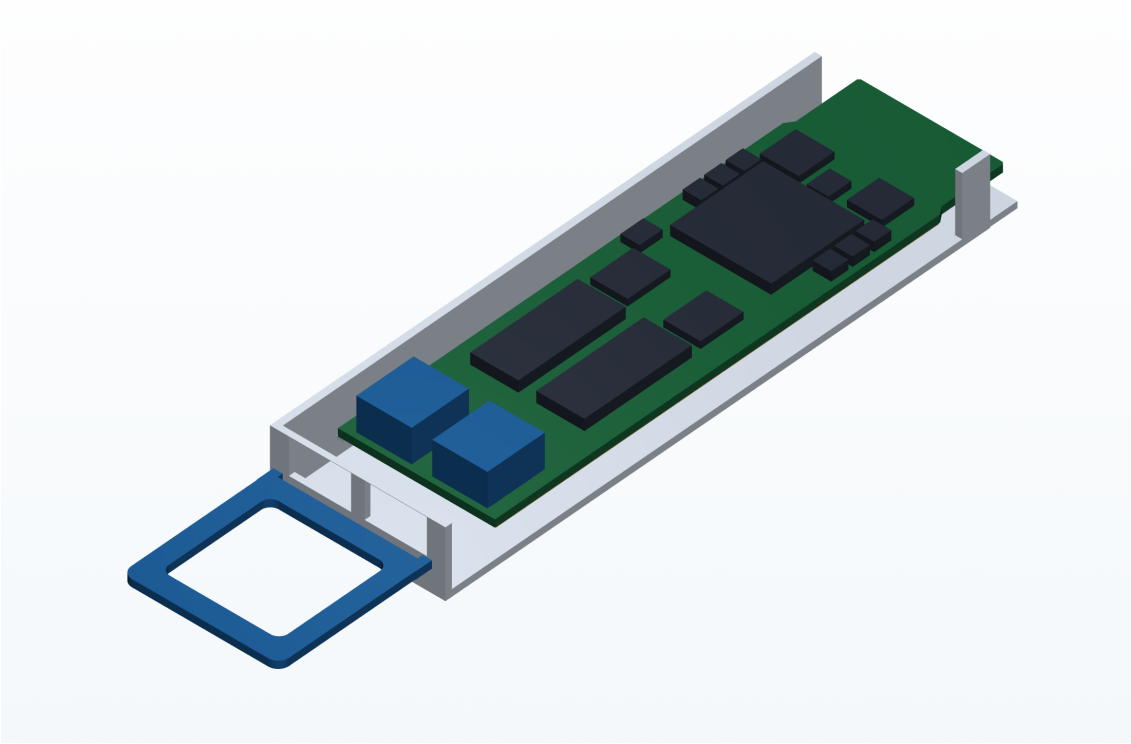

Simplified thermal cutaway. The primary analysis STEP retains the full thermal stack; this sectioned image is an inspection view. [S3]

Representation	Solid bodies	Purpose
Detailed module	3,080	Mechanical and packaging inspection
Recommended thermal CAD	36	Main packages and continuous thermal path
All-component thermal CAD	184	Filled blocks for every populated component

Heat path: package - component pad - copper spreader - lid pad - lid boss - external roof.

The recommended model documents 43 intended contacts. For the later conduction-only setup, the disconnected pull loop is suppressed, leaving 35 active solid regions. The nine thermal pads and effective support layers remain explicit.

Source: thermal CAD README and contact records [S3]; prepared solid-conduction setup [S4].

06 / SINGLE-MODULE THERMAL STUDY

20 W conduction study: prepared

Six cases have been configured and initialized. A completed mesh comparison is still required.

20 W
assumed total module heat

25 °C
fixed roof-patch temperature

996 mm²
nominal cooling-patch area

Prepared polyhedral cell counts

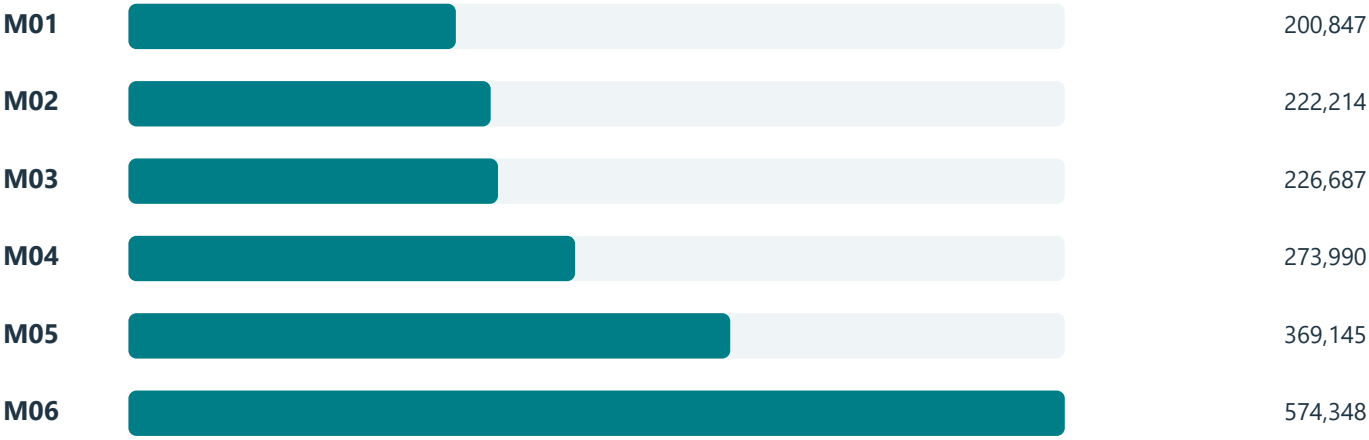

Counts describe prepared meshes. All saved setup iteration counters were zero. [S4]

Latest recorded execution: incomplete.
The delivery study report dated 28 September records all six attempts failed at zero iterations and labels the results invalid. No mesh recommendation or converged temperature result is available. [S5]

Configured physics. Energy-only conduction in 35 solids; perfect interfaces with finite resistance represented by explicit pad/support solids; remaining exterior and cavity walls insulated. No fluid or radiation is included.

Next. Resolve execution, then check energy balance, stationarity and mesh sensitivity. Effective material properties and device powers remain assumptions. Package-body temperatures must not be presented as semiconductor junction temperatures.

Sources: native setup validation [S4]; latest delivery-run report and transient limitations [S5].

07 / EIGHT-MODULE LIQUID COOLING

Latest v11 setup is under development

The current branch couples an eight-module assembly to a 30-minichannel cold plate.

8 x 40 W
320 W assumed total load

1 L/min
water flow at 25 °C

30
cold-plate minichannels

Configured baseline	Value / interpretation
Solver model	Steady conjugate heat transfer; laminar baseline; energy enabled.
Ports and boundaries	8 x 4 mm ports; 0.520833 m/s inlet; 298.15 K inlet; 0 Pa gauge outlet.
Thermal connections	290 intended cell zones and eight nonconformal cold-plate/module interfaces; perfectly coupled baseline.
Assumptions	Effective component properties and assumed power split; adiabatic outside walls; radiation and gravity disabled.

Current blocker: mesh import / setup validation.
The 28 September Fluent transcript reports an invalid face-thread type and skipped zones. No native ready-case output was found in either inspected v11 package copy. The configuration requires repair and verification before solution work. [S6]

Earlier branch. The M4-M6 cooling package used a different reconstructed model. M4 and M5 passed setup/reopen checks; M6 saved but failed its fresh-session reopen because of memory. These are earlier setup records, not completed cooling results. [S7]

Sources: v11 baseline and 28 September import transcript [S6]; earlier package validation [S7].

08 / ROUTE TO COMPLETION

What remains before results are issued

The next phase is to turn the prepared models into checked, reproducible engineering evidence.

Priority	Next work	Evidence to retain
1 / Repair setup	Resolve v11 mesh import and zone assignment. Review scale, domain connectivity and each thermal interface.	Successful native mesh check; zone/material/source readback; saved case/data and fresh-session reopen.
2 / Verify the solves	Complete the single-module and assembly solves under documented assumptions.	Residual histories, temperature/heat-flow stationarity and energy balance; actual iteration counts.
3 / Test sensitivity	Compare suitable mesh levels; test contact and property assumptions. For transient work, also check time step.	Comparable metrics with mesh/time-step evidence; no unsupported independence or GCI claim.
4 / Assess design	Review component temperatures, cooling distribution, pressure drop and mechanical/optical interfaces against stated requirements.	Traceable limits and inputs; accepted changes; a report separating predictions from verified performance.

How the project is presented

This project is in progress. The reference CAD and thermal-model preparation are developed, while simulation setup, verification and design evaluation are continuing. Final performance results and conclusions will be added once the analyses have been completed and checked.

This report records the present state of the work. It does not introduce new simulations or claim manufacturing release, standards qualification, signal integrity, optical performance or verified cooling capability.

Priorities reflect the unresolved items in source records [S1-S7].

09 / SOURCE RECORD

Traceable files and deliverables

The figures are unchanged copies of saved CAD renders. The source documents below support this progress snapshot.

S1 / Complete module v5

Library: 01_CAD/Complete_Module_v5/READ_ME_FIRST_COMPLETE_MODULE.md and OSFP1600_RHS_v5_Geometry_Validation.json. Complete, exploded and cutaway PNGs from this folder.

S2 / PCB and optical details

Library: 09_Source_and_References/Aster_OSFP_Technical_Audit_Rev01_2026-09-28.md; PCB image in 07_Images_and_Video; LC view in 01_CAD/Optical_Connector_Details_v4.

S3 / Thermal geometry

Library: 01_CAD/Simplified_Thermal_Geometry_v5/READ_ME_FIRST_CFD.md, body-input/contact tables and geometry validation; CFD_Simplified_Cutaway.png.

S4 / Prepared single-module cases

Original component project: 04_CFD_Simulations/03_OSFP_RHS_v5_Steady_Mesh_Study/validation/SETUP_VALIDATION.md and NATIVE_SETUP_CHECKS.json.

S5 / Incomplete analysis record

Original component delivery: 11_Exports/05_Delivery_Packages/OSFP_RHS_v5_FLUENT_STEADY_6_MESH_STUDY_10_CORES/03_OSFP_RHS_v5_Steady_Mesh_Study/runs/20260927_195302_320140/reports/mesh_study_report.md. Transient limitations: 04_CFD_Simulations/02_OSFP_RHS_v5_Transient_Solid.

S6 / Current eight-module v11

Original v11 package: README_FIRST.md; 03_SETUP/FLUENT_SETUP_ASSUMPTIONS.json; 04_DOCS/MODEL_ASSUMPTIONS_AND_LIMITATIONS.md. Import evidence in the duplicate (1) package: 03_SETUP/fluent-20260928-094651-24040.trn.

S7 / Earlier M4-M6 package

Original OSFP_M4_M5_M6_Fluent_Package/OSFP_M4_M5_M6_Fluent_Package: README_FIRST.md, docs/VALIDATION.md and M6_MEMORY_REPAIR.md. Later repair status supersedes initial packaging notes.

Roots. Library: D:/Portfolio/01_Engineering_Projects/CAD_and_Mechanical_Design/OSFP_Module_Reference_CAD. Original project: D:/Ansys Projects/Amphenol. Component project: 02_Component_Projects/01_OSFP_1p6T. v11 package: OSFP1600_RHS_v11_FLUENT_READY_40W_1LPM_PACKAGE/OSFP1600_RHS_v11_FLUENT_READY_40W_1LPM.

Editable report, unchanged figure copies and SHA-256 provenance are preserved with the portfolio library.